SPECIFICATION SHEET
Bholanath

STEPPER MOTOR
BH 110 SH 201 - 8004 BK
HIGH TORQUE HYBRID

Bholanath™
COMMITTED TO PRECISION

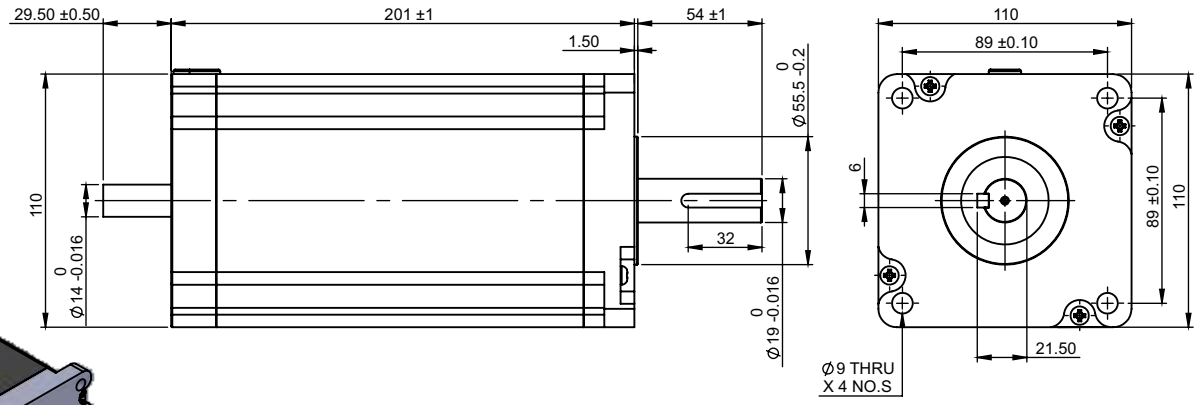

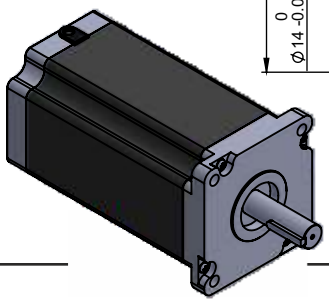

TECHNICAL DATA

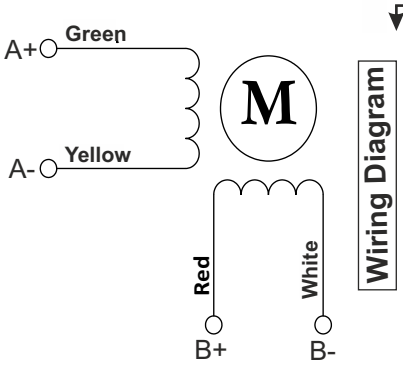

SPECIFICATION	BH 110 SH 201 - 8004 BK		
	MODEL		Bipolar
1	Rated Voltage	V	5.84
2	Current / Phase	A	8
3	Resistance / Phase	± 10% Ω	0.73
4	Inductance / Phase	± 20% mH	14.01
5	Holding Torque	Nm	30
6	Rotor Inertia	G-CM^2	16200
7	Weight	KG.	11.7
8	No of Lead	N^0	4
9	Operating Voltage	VAC	60 - 130
10	Operating Voltage	VDC	84-182

CHARACTERISTICS

Step Angle - 1.8^0
Step Angle Accuracy - ± 5%
Insulation Class - H
Ambient Temperature - - 20^{0}C + 50^{0}C
Temperature Rise - 80^0 C Max. (Rated Current Phase 2 ON)
Insulation Resistance 100 M Ohms Min.500 VDC
Dielectric Strength 1800 VAC For One Minute
Shaft Radial Play 0.02 Max. Play (450 G Load)
Shaft Axial Play 0.08 Max. Play (450 G Load)
Max.Radial Force 220 N (20MM From Front Flange)
Max.Axial Force 60 N

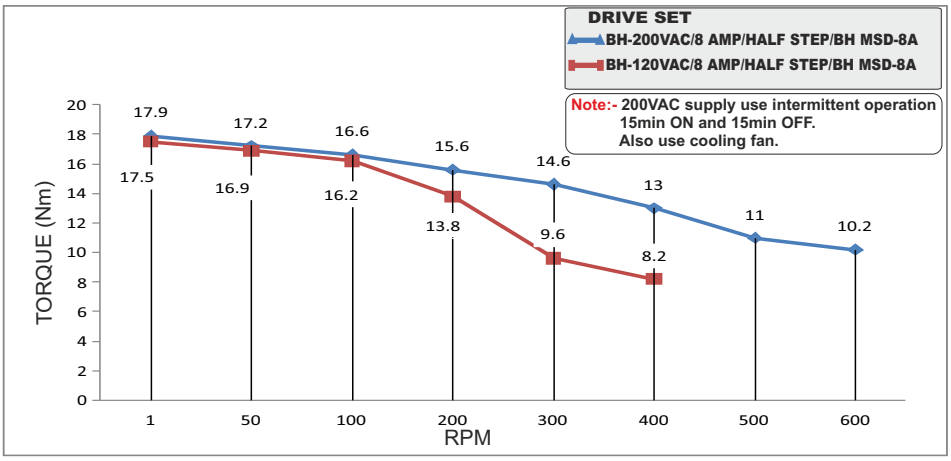

STEPPER MOTOR - BH 110 SH 201 - 8004 BK

Bholanath™
COMMITTED TO PRECISION
BHOLANATH COOL STEPPERS™

Bholanath Precision Engineering Pvt.Ltd.
11,Kembros Ind.Estate , Sonapur Lane , Bhandup (W),Mumbai - 400078.
Telefax/Phone : 25662856/25664338/67993260 Email : support@bholanath.in
Mobile No : 9920903825/9821671733/9930514603/9819515543/9323166582.