SPECIFICATION SHEET *Bholanath*	STEPPER MOTOR BH86 SH 65 - 4004HL-8 HIGH TORQUE HYBRID	Bholanath™ COMMITTED TO PRECISION

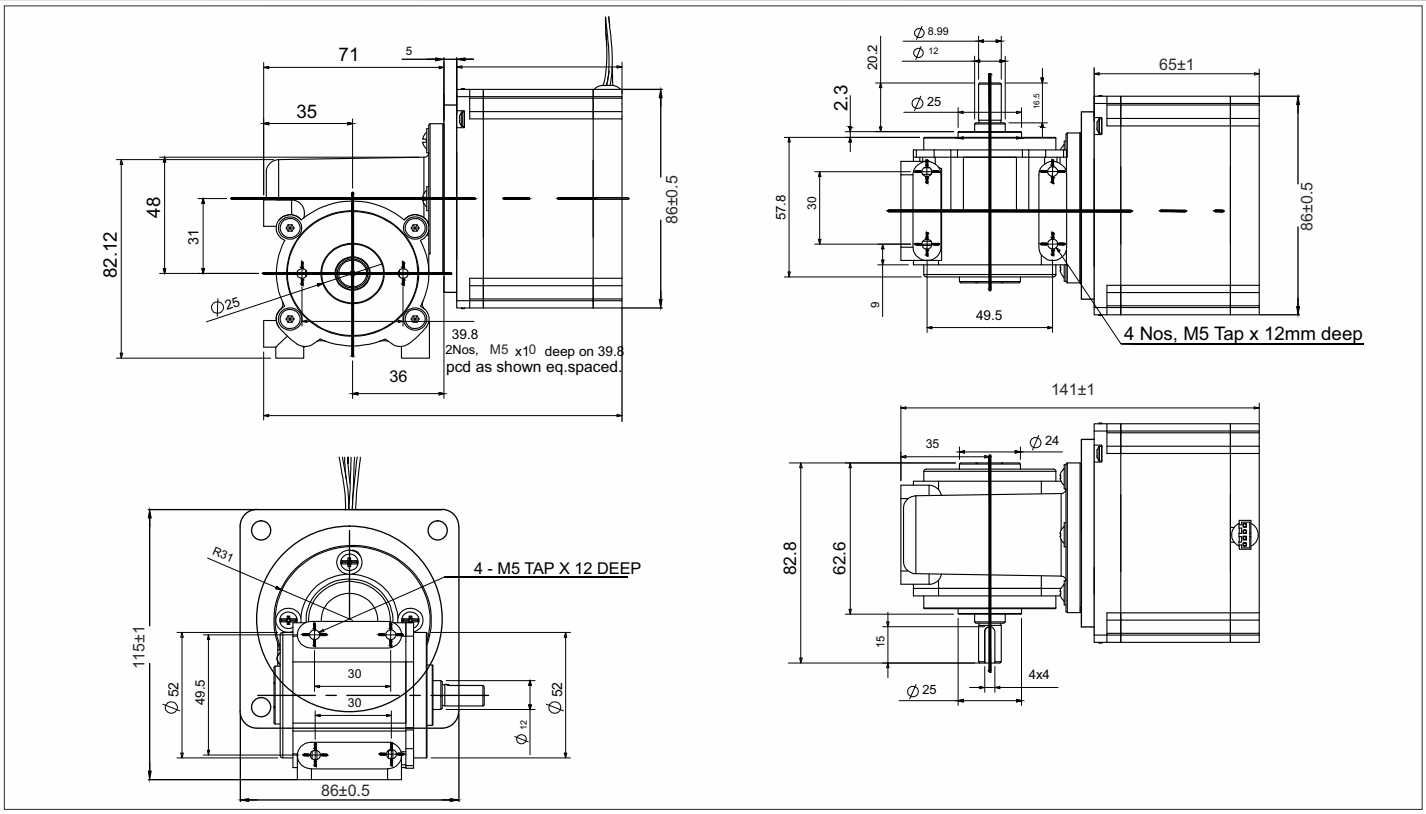

TECHNICAL DATA

CHARACTERISTICS
Motor - Bipolar
Steps per Revolution - 200
Step Angle - 1.8 degree
Motor Step Angle Accuracy- ± 3 Arc minute
Dimensions - Refer drawing
Weight with Gear box - 2.35 Kg
Insulation Class - Class H
Protection Class - DIN40050 - IP30
Resistance of Insulation - 100M Ω 500 VDC
Resistance per phase - 0.47 Ω
Inductance per phase - 2.8 mH
Normal current per phase - 4 Amp
Operating Voltage - 48 to 170 VDC
Operating Voltage - 34 to 120 VAC
Stock Temperature - (-10°C to + 70°C)
Operation Temperature - (-10°C to + 40°C)
Holding Torque Of Motor - 3.4 Nm
Holding Torque with gear Box - 27.2 Nm (272 Kgcm)
Shaft Axial Play - 0.08 MMMax(450 G Load)
Shaft Radial Play - 0.02 MMMax(450 G Load)
Gear Box Ratio - 8:1
Backlash - 0.8 Degree
Rotor Inertia of Motor - 273.13 GM-CM^2
Rotor Inertia of Gearbox - 137.75 GM-CM^2

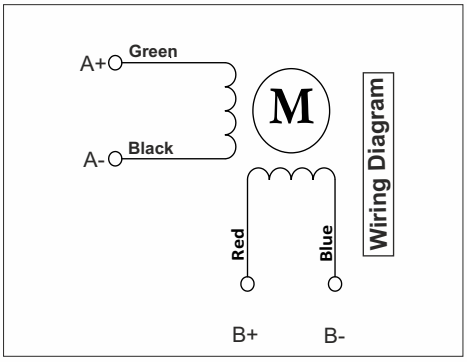

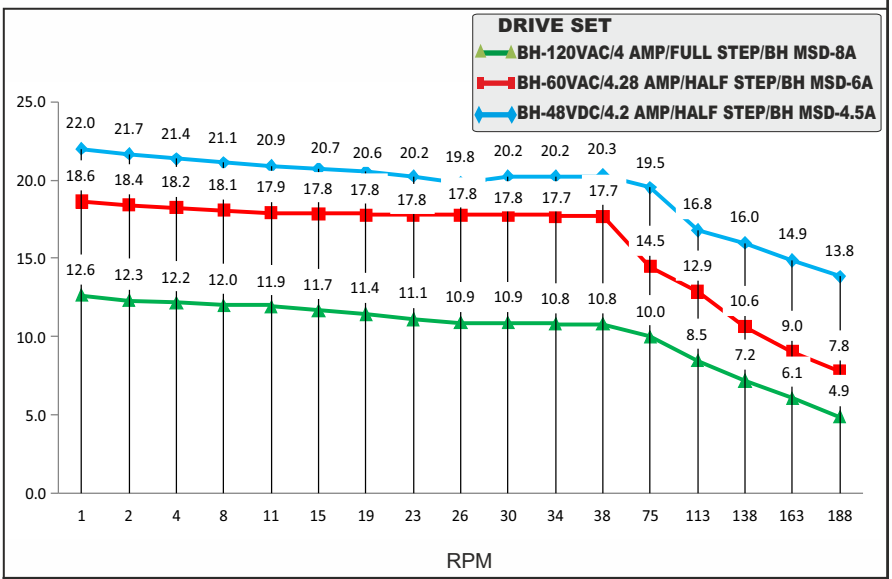

STEPPER MOTOR - BH86SH65-4004HL-8