SPECIFICATION SHEET
Bholanath

STEPPER MOTOR
BH86 SH 118 - 6004 HL-7.5
HIGH TORQUE HYBRID

Bholanath™
COMMITTED TO PRECISION

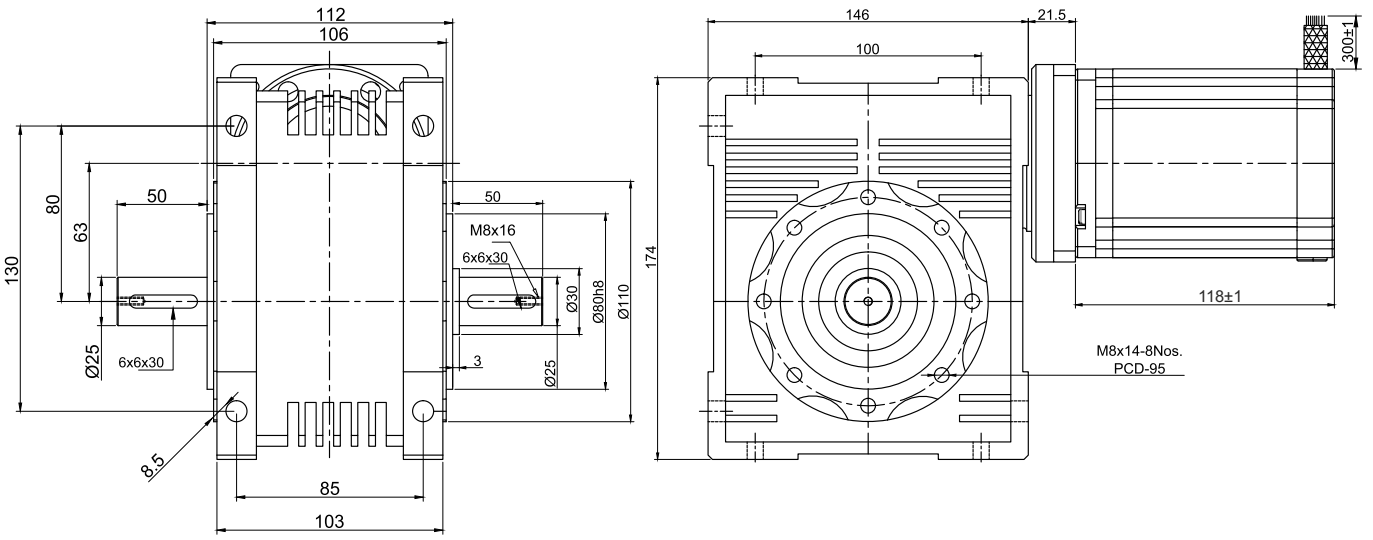

Wiring Diagram

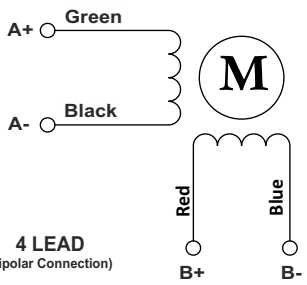

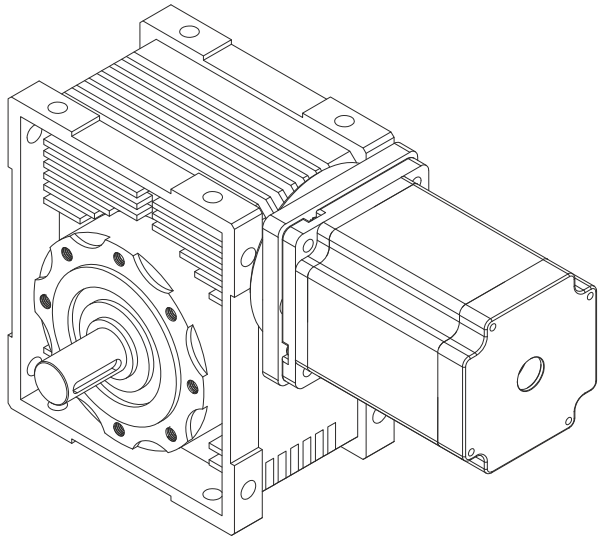

Max.RPM At Gear Box Shaft - 70 RPM

CHARACTERISTICS

- Motor - Bipolar
- Steps per Revolution - 200
- Step Angle - 1.8 degree
- Motor Step Angle Accuracy- ± 3 Arc minute
- Dimensions - Refer drawing
- Weight with Gear box - 7.5 Kg
- Insulation Class - Class H
- Protection Class - DIN40050 - IP30
- Resistance of Insulation - 100M Ω 500 VDC
- Resistance per phase - 0.42 Ω
- Inductance per phase - 4.25 mH
- Normal current per phase - 6 Amp
- Operating Voltage - 24 to 170 VDC
- Operating Voltage - 34 to 120VAC
- Stock Temperature - (-10°C to + 70°C)
- Operation Temperature - (-10°C to + 40°C)
- Holding Torque Of Motor - 8.7 Nm
- Holding Torque with gear Box - 65.0 Nm (650 Kgcm)
- Admissible Radial Load < 2359 N
- Gear Box Ratio - 7.5:1
- Backlash - 0.8 Degree

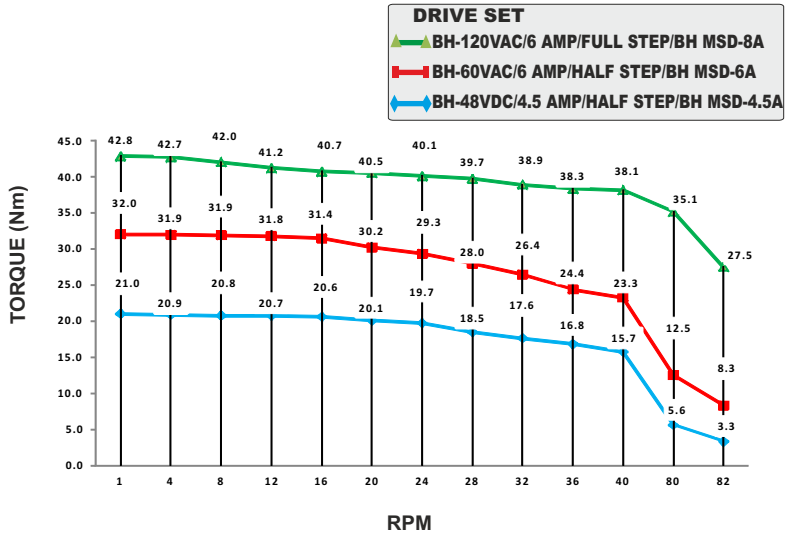

PLANETARY GEAR BOX STEPPER MOTOR - BH86SH118-6004HL-7.5