Bholanath™

COMMITTED TO PRECISION

Bholanath
Precision Engineering Pvt.Ltd.

User's Manual

Step Servo - BHSS - 25 W-IP65
BHSSD Step Servo Driver

NOTE:- Step Servo Drive & Motor are Matched Pair With **BH-36** Vdc Power supply

Office Address

Bholanath Precision Engineering Pvt.Ltd.
11,Kembros Industrial Estate,Near Asian Paint Company,
Sonapur Lane,Bhandup (West),Mumbai - 400078,India.

FACTORY ADDRESS
Plot No - 1, Gut No - 203 , Dahagaon , Vasind (West) , Wada Link Road ,
Off Mumbai Nashik Road ,
Opposite Jindal Steel Factory ,
Taluka - Shahpur , District - Thane - 421 302 ,
Maharashtra State , India.

Contact Us

Phone No : -
+91 - 9821671733
+91 - 9920903825
+91 - 9930514603
+91 - 9323166582

91 - 22 - 25664338 /25662856 / 67993260

Email : support@bholanath.in

INDEX

Overview (Step Servo) 3

a. BHSS 25 W-IP65 - Step Servo 4

1. Drive Circuit Connection With BH-SDC-01 & 02 (Step Servo) 5

Drive circuit connection wth PLC And Drive front page 6

Overview (Drive) 7

2.Features 7

3.Ports Introduction 8

3.1 ALM and PEND signal output ports 8
3.2 Control Signal Input Ports 8
3.3 Encoder Feedback Signal Input Ports 9
3.4 Power Interface Ports 10

4. Technological Index 11

5. Connections to Control Signal 12

5.1 Connections to Common Anode 12
5.2 Connections to Common Cathode 13
5.3 Connections to Differential Signal 14
5.4 Sequence Chart of Control Signals 15

6. DIP Switch Setting 15

6.1 Activate Edge Setting 15
6.2 Running Direction Setting 16
6.3 Micro steps Setting 16

7. Faults alarm and LED flicker frequency 17

8. Appearance and Installation Dimensions 18

9. Typical Connection 19

10. Processing Methods to Common Problems and Faults 20

10.1 Power on power light off 20
10.2 Power on red alarm light on 20
10.3 Red alarm light on after the motor running a small angle 20
10.4 After input pulse signal but the motor not running 20

Bholanath Step Servo motors are closed loop stepping systems - high speed (>2000 RPM) stepper motors with incremental optical encoders and digital drives.

Incremental optical encoders (1000 PPR and 2500 PPR) feedback with new generation digital drives,Bholanath Step Servo motors get the reliability of servo motors.

Bholanath Step Servo motors are good replacement of servo motors (25 Watts to 1500 Watts), the price being much lower than servo motors.

Bholanath Step Servo motors give high speed performance of servo motors with accurate feedback and micro stepping accuracy of stepper motors with feedback.

Bholanath Step Servo motors give better holding torque's(complete stand still position).

Comparison between Bholanath Step Servo BHSS - 400 W with 400 Watt servo motor.

As can seen from the graph,the Bholanath Step Servo motor torque equals servomotor torque at 2000 RPM.Thus for applications up to 2000 RPM,Bholanath Step Servo motor can easily be used.At lesser RPM,say at 1000 RPM,the Bholanath Step Servo motor gives 50% more torque than servo,giving the user much better performance.

The Step Servo Motor Driver has automatic current adjustments as per load,resulting in low heat / generation,thereby giving high efficiency.

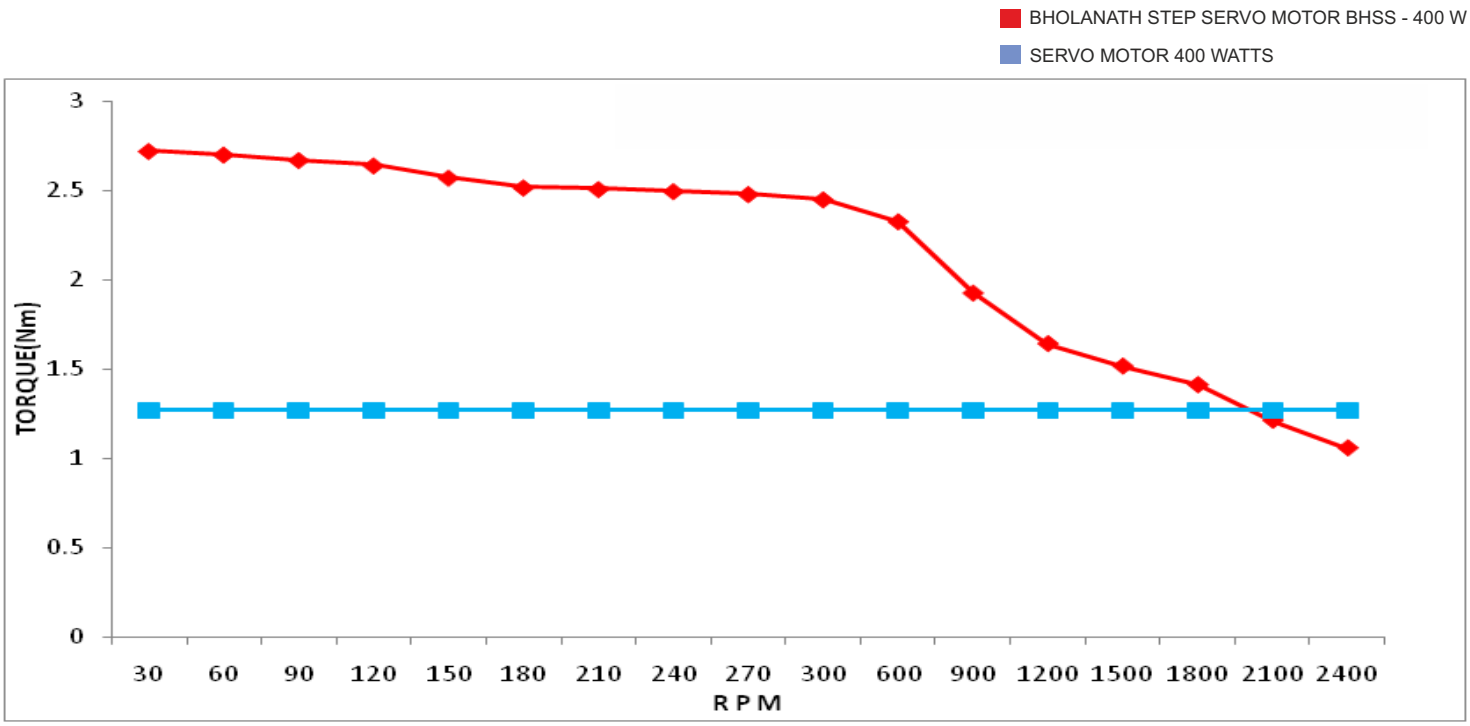

BHSS - 25 W-IP65 STEP SERVO MOTOR

Bholanath™
COMMITTED TO PRECISION

IP65 PROTECTION AGAINST CONTACT AND INFILTRATION OF WATER AND DIRT

Closed Loop Stepping System which includes High Speed (>2000 RPM)Stepper Motors with Incremental Optical Encoders,Digital Drives and 3 Meter Cable.

SUITABILITY - The BHSS - 25 W-IP65 Step Servo is comparable to 25 Watts Servo Motor upto 1500RPM. The Step - Servo Motor BHSS - 25 W-IP65 gives more torque at lower RPM's thus giving a better performance than 25 Watts Servo Motors as seen in the graph.

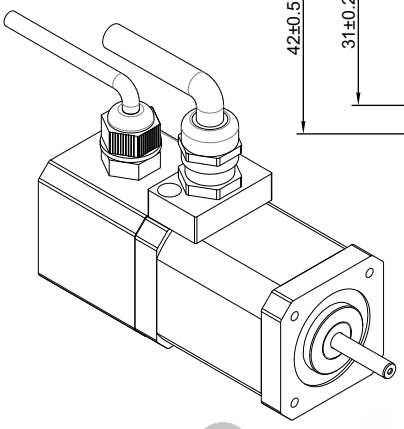

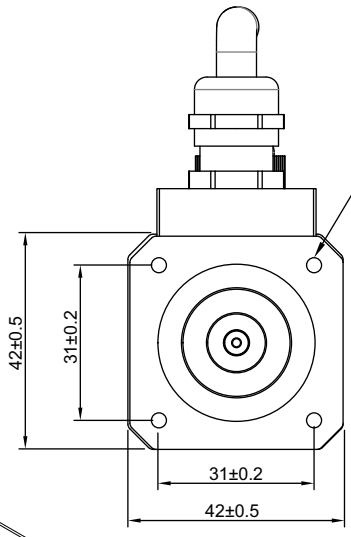

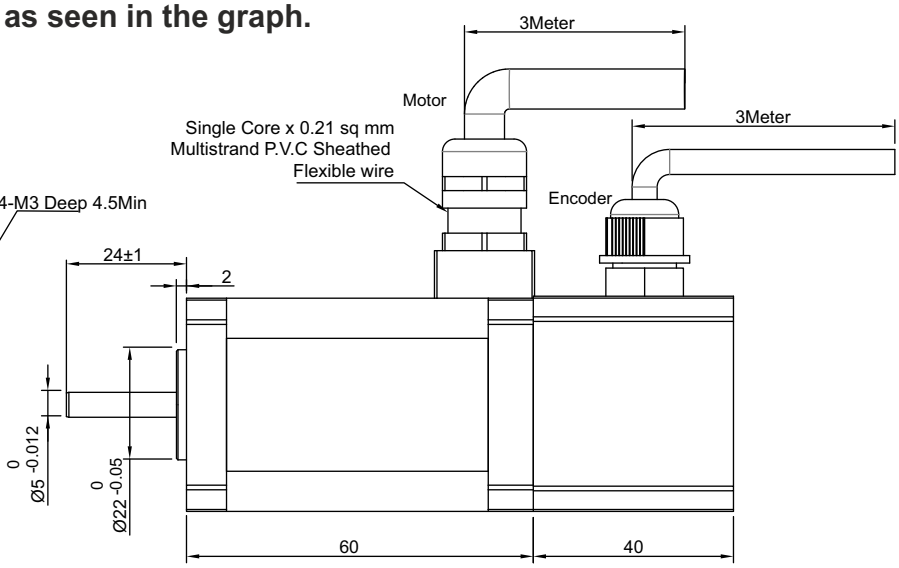

TECHNICAL DATA

Characteristics

Power Input - BH-36 Vdc
Encoder Options - 1000 PPR/2500 PPR
Cable Length - 3 / 5 Meters
Motor - Bipolar Hybrid Stepper Motor
Step Angle - 1.8 Degree
Degree Of Protection - DIN 40050 IP 60 / IP 65
Insulation Class - H
Weight - 0.556 Kg
Current Per Phase - 0.85 A
Torque - 0.7 Nm - 0.13 Nm
RPM - 0 - 1500
Stock Temperature - (- 20° C to + 50° C)
Operation Temperature - (- 10° C to + 40° C)
Shaft Axial Play - 0.08 Max.Play (450 G Load)
Shaft Radial Play - 0.02 Max.Play (450 G Load)
Max. Radial Force - 28 N (20 MM from Front Flange)
Max. Axial Force - 10 N (20 MM from Front Flange)

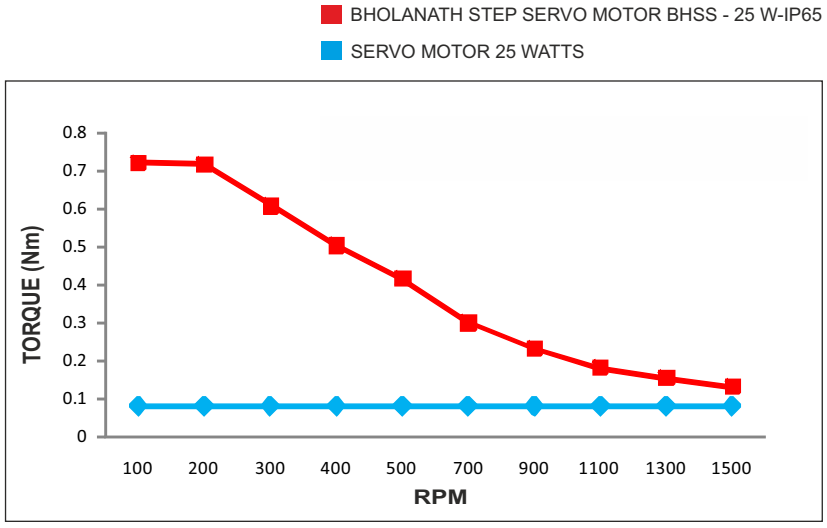

Motor Options Available -
Standard Model - **S**
With Low Backlash Planetary Gearbox - **PL**
With Electro Magnetic Brake - **BR**
With Spur Gearbox - **SG**
CE Certificate - N - STANDARD/CE - CERTIFIED
ORDERING CODE - BHSS- 25W - S - 1000 - 3MTR.- IP 60-N

DRIVE CIRCUIT CONNECTION

Bholanath™
COMMITTED TO PRECISION

BHOLANATH STEP SERVO DRIVE WITH BH-SDC-01 CIRCUIT CONNECTION

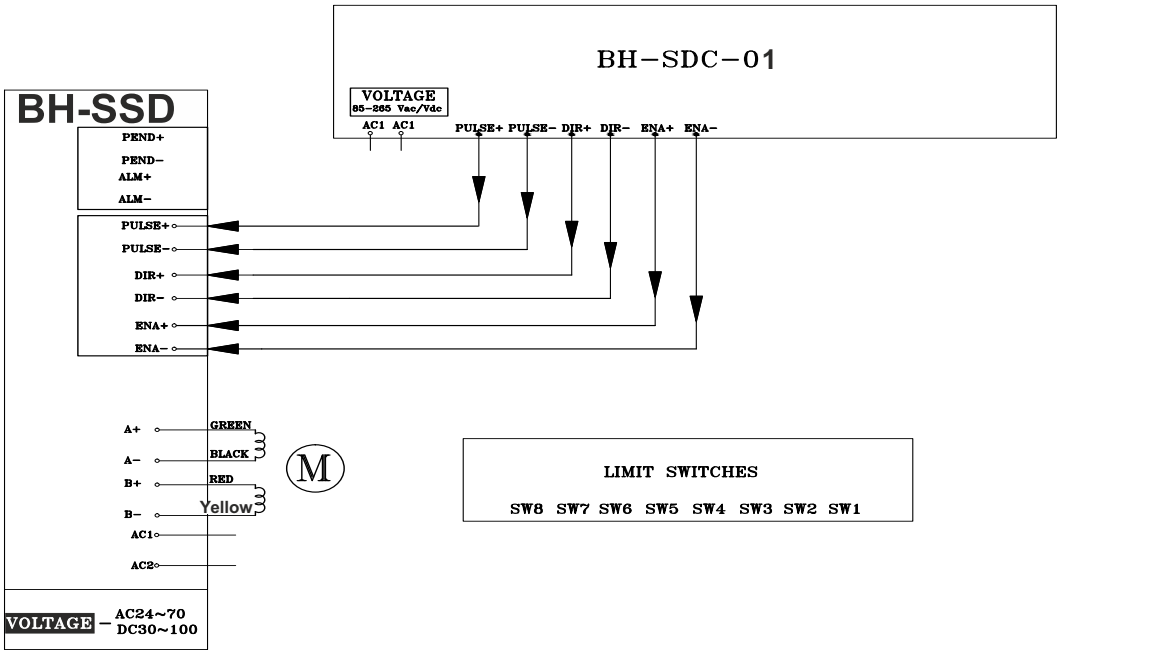

BHOLANATH PRECISION ENGINEERING PVT.LTD.
11, KEMBROS IND. ESTATE, SONAPUR LANE, BHANDUP (W), MUMBAI-400078.

	NAME	DATE	TITLE : STEP SERVO DRIVE WITH BH SDC-01 CIRCUIT CONNECTION		
DRN.	SADDAM.H	14.03.2017	MATL.– :	FINISH–	
CKD.			QTY. :	SCALE:–	PART NO.:
APD.			SHEET No. :1 OF 1	DRG. No. : 1	REV. 0

BHOLANATH STEP SERVO DRIVE WITH BH-SDC-02 CIRCUIT CONNECTION

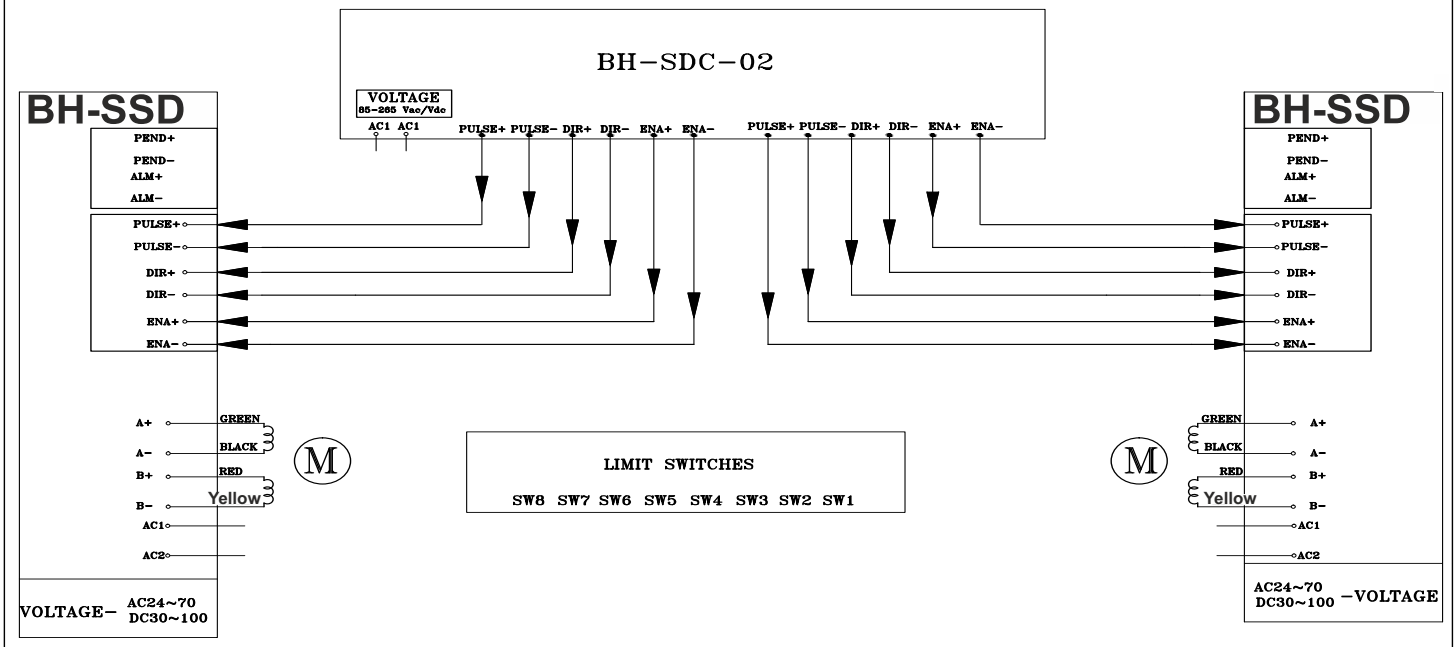

BHOLANATH PRECISION ENGINEERING PVT.LTD.
11, KEMBROS IND. ESTATE, SONAPUR LANE, BHANDUP (W), MUMBAI-400078.

	NAME	DATE	TITLE : STEP SERVO DRIVE WITH BH SDC-01 CIRCUIT CONNECTION		
DRN.	SADDAM.H	14.03.2017	MATL.– :	FINISH–	
CKD.			QTY. :	SCALE:–	PART NO.:
APD.			SHEET No. :1 OF 1	DRG. No. : 1	REV. 0

BHOLANATH MICRO STEP SERVO BIPOLAR DRIVE CIRCUIT CONNECTION

NOTE : THE PLC USED IN THIS CIRCUIT CONTROLLER GIVES NPN OUTPUT.

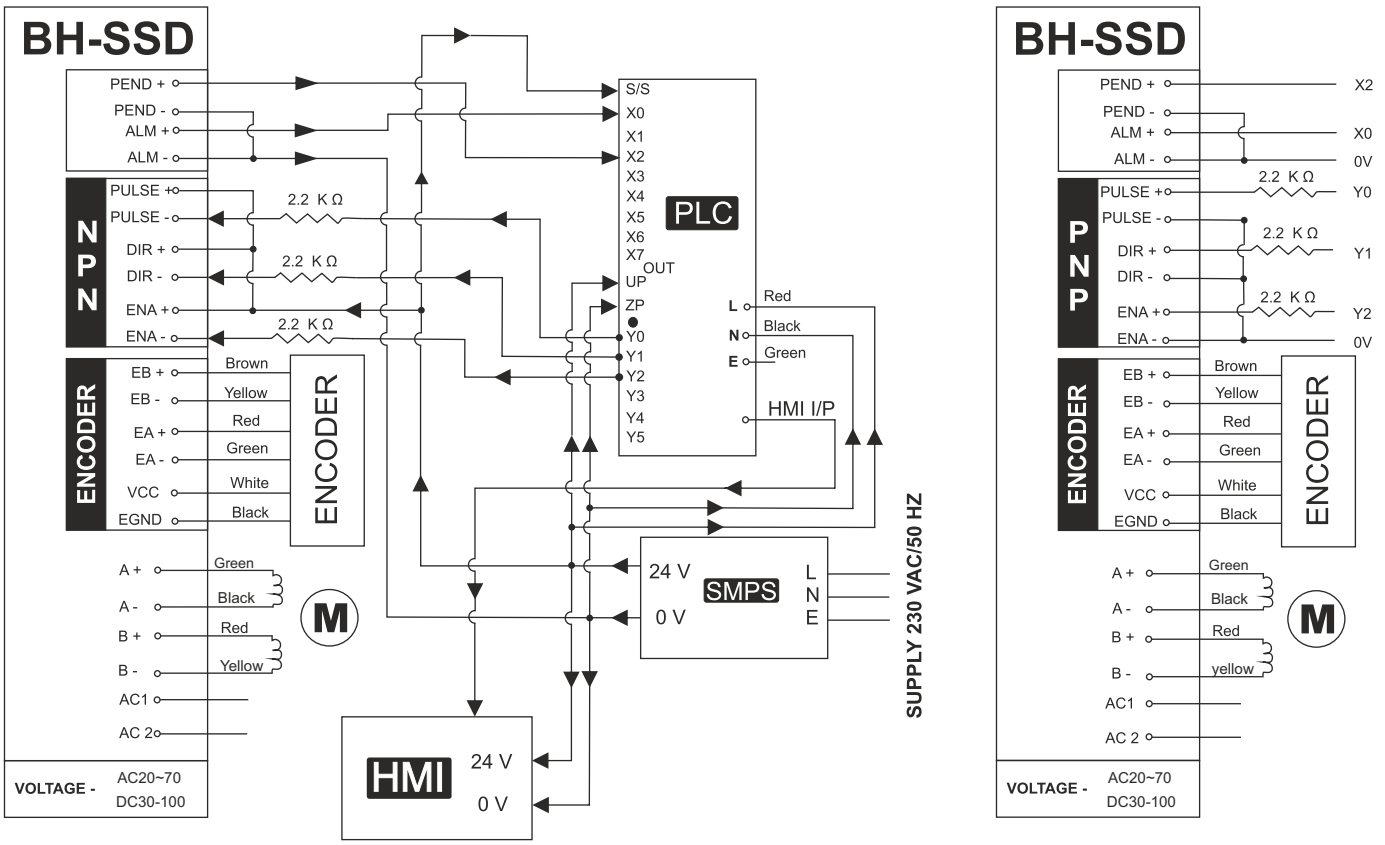

User's Manual

BHSSD

Step Servo Driver

1. Overview

The BHSSD hybrid stepper servo drive system integrates the servo control technology into the digital stepper drive perfectly.And this product adopts an optical encoder with high speed position sampling feedback of 50 μ s, once the position deviation appears.it will be fixed immediately.This product is compatible the advantages of the stepper drive and the servo drive , such as lower heat , less vibration , fast acceleration and so on. This kind of servo drive also has an excellent cost performance.

2. Features

Without losting step, High accuracy in positioning.

100% rated output torque.

Variable current control technology, High current efficiency.

Small vibration, Smooth and reliable moving at low speed.

Accelerate and decelerate control inside, Great improvement in smoothness of starting or stopping the motor.

Compatible with 1000 and 2500 lines encoder.

No adjustment in general applications.

Over current, over voltage and over position error protection.

Green light means running while red light means protection or off line.

3. Ports Introduction

3.1 ALM and PEND signal output ports

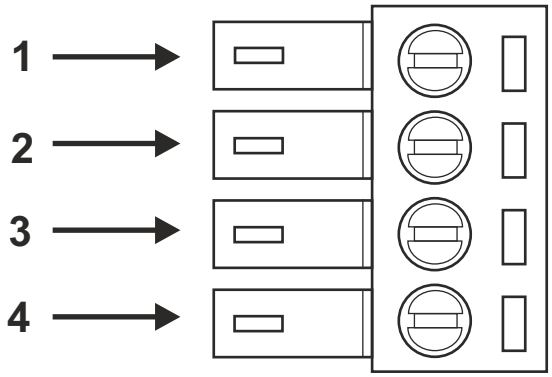

Port	Symbol	Name	Remark
1	PEND +	In position signal output +	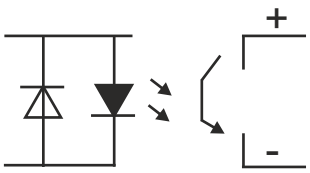
2	PEND -	In position signal output -	
3	ALM +	Alarm output +	
4	ALM -	Alarm output -	

3.2 Control Signal Input Ports

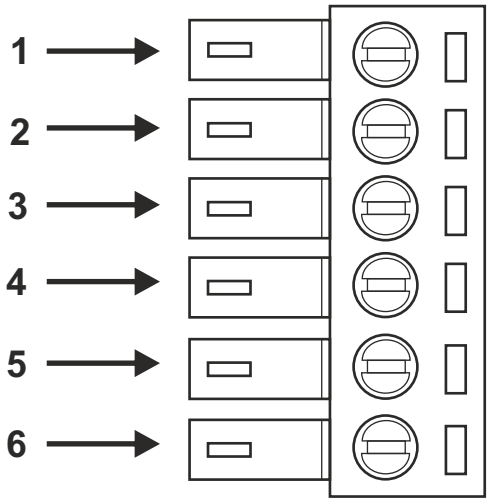

Port	Symbol	Name	Remark
1	PLS +	Pulse signal +	Compatible with 5V or 24 V
2	PLS -	Pulse signal -	
3	DIR +	Direction signal +	Compatible with 5V or 24 V
4	DIR -	Direction signal -	
5	ENA +	Enable signal +	Compatible with 5V or 24 V
6	ENA -	Enable signal -	

3.3 Encoder Feedback Signal Input Ports

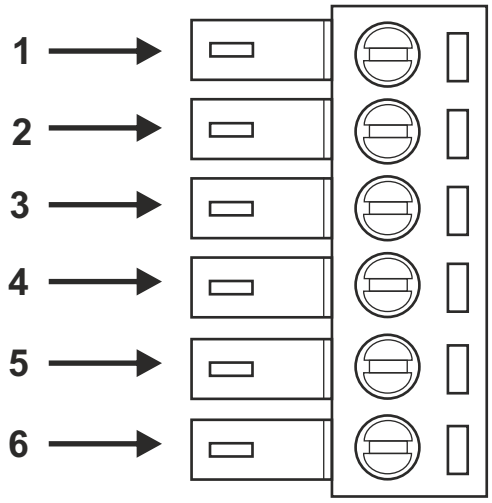

Port	Symbol	Name	Remark
1	EB +	Encoder Phase B +	Brown
2	EB -	Encoder Phase B -	Yellow
3	EA +	Encoder Phase A +	Red
4	EA -	Encoder Phase A -	Green
5	VCC	Input Power	White
6	GND	Input power ground	Black

3.4 Power Interface Ports

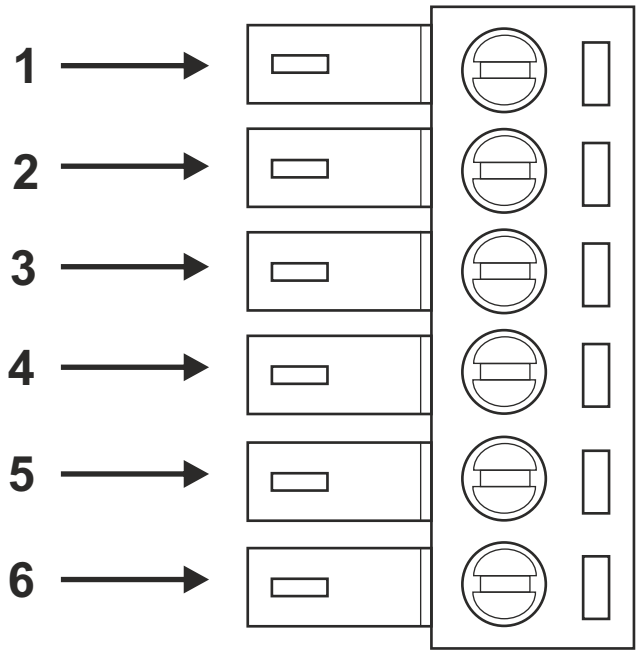

Port	Identification	Symbol	Name	Remark
1	Motor Phase Wire Input Ports	A +	Phase A +(Green)	Motor Phase A
2		A -	Phase A - (Black)	
3		B +	Phase B + (Red)	Motor Phase B
4		B -	Phase B - (Yellow)	
5	Power Input Ports	VCC	Input Power +	AC 24 V - 70 V DC 30 V - 100 V
6		GND	Input Power -	

4. Technological Index

Input Voltage		24 ~ 70 VAC or 30 ~ 100 VDC
Output Current		6A 20 Khz PWM
Pulse Frequency Max.		200 K
Communication rate		57.6 Kbps
Protection		Over current peak value 12A ± 10% Over voltage value 130 V The over position error range can be set through the HISU
Overall Dimensions (mm)		150 x 97.5 x 53
Weight		Approximate 580 g
Environment Specifications	Environment	Avoid dust, oil fog and corrosive gases
	Operating Temperature	70°C Max.
	Storage Temperature	- 20°C ~ + 65°C
	Humidity	40 ~ 90% RH
	Cooling Method	Natural cooling or forced air cooling

5. Connections to Control Signal

5.1 Connections to Common Anode

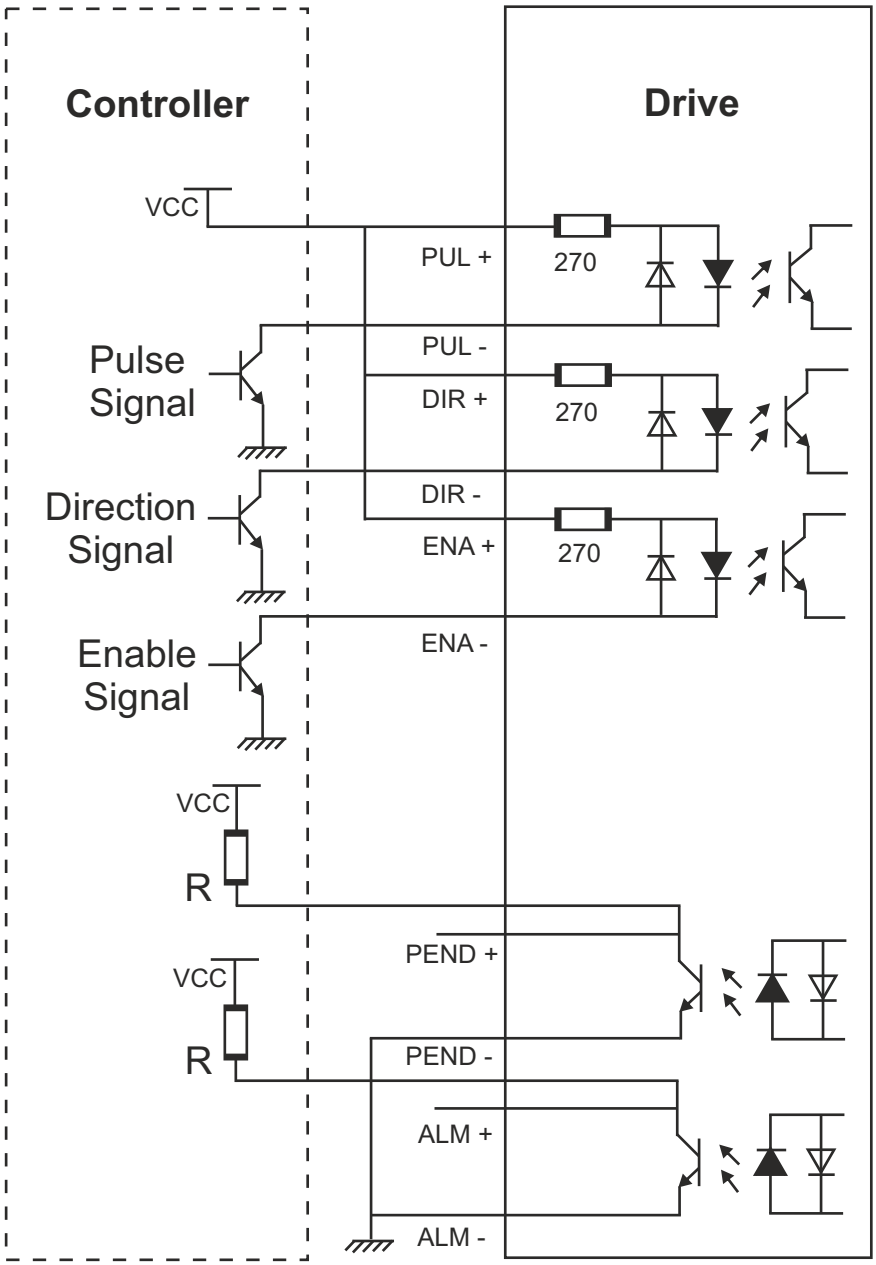

Remark :

VCC is compatible with 5 V or 24 V ;
R (3 ~ 5 K) must be connected to control signal terminal.

5.2 Connections to Common Cathode

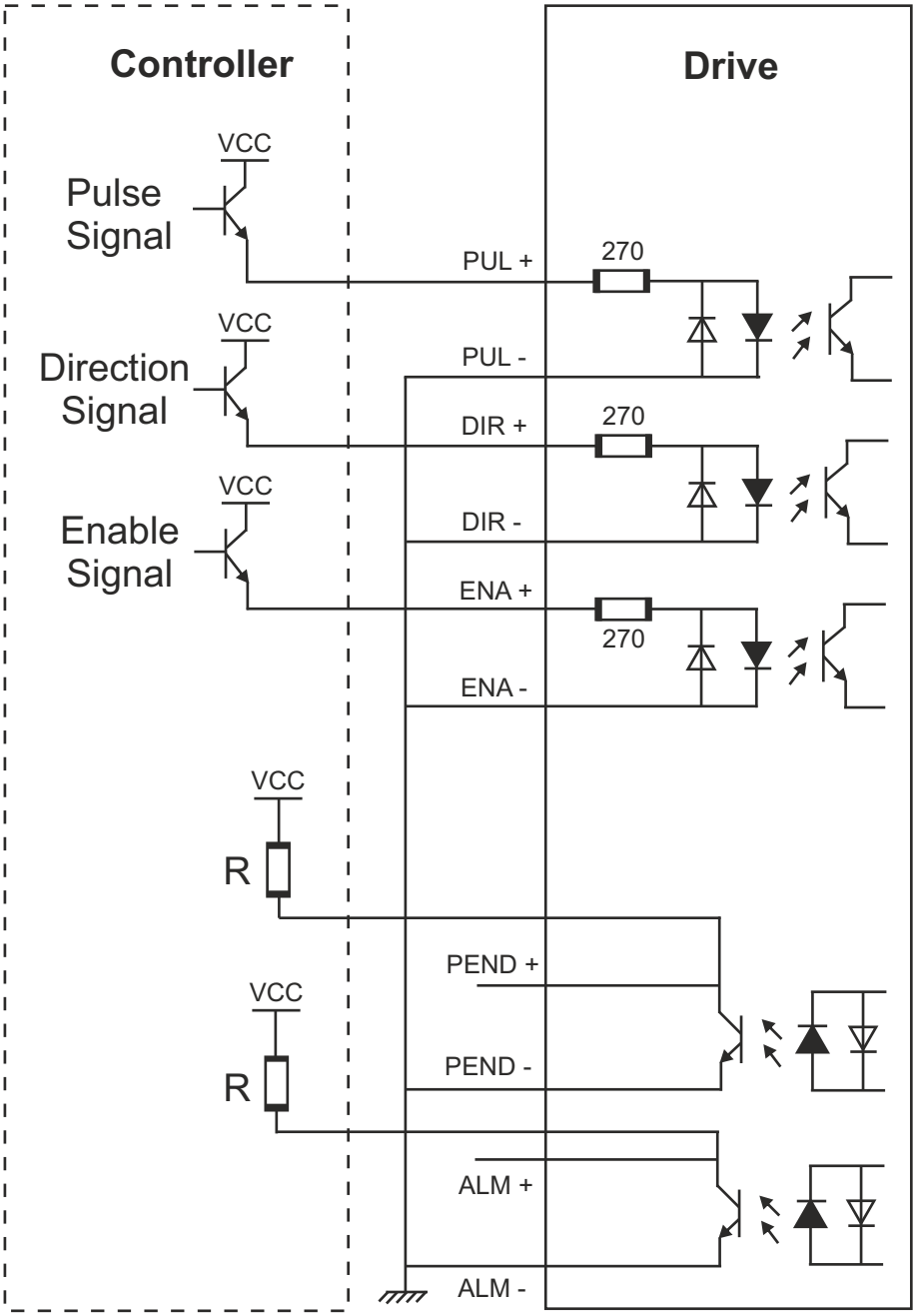

Remark :

VCC is compatible with 5 V or 24 V ;
R (3 ~ 5 K) must be connected to control signal terminal.

5.3 Connections to Differential Signal

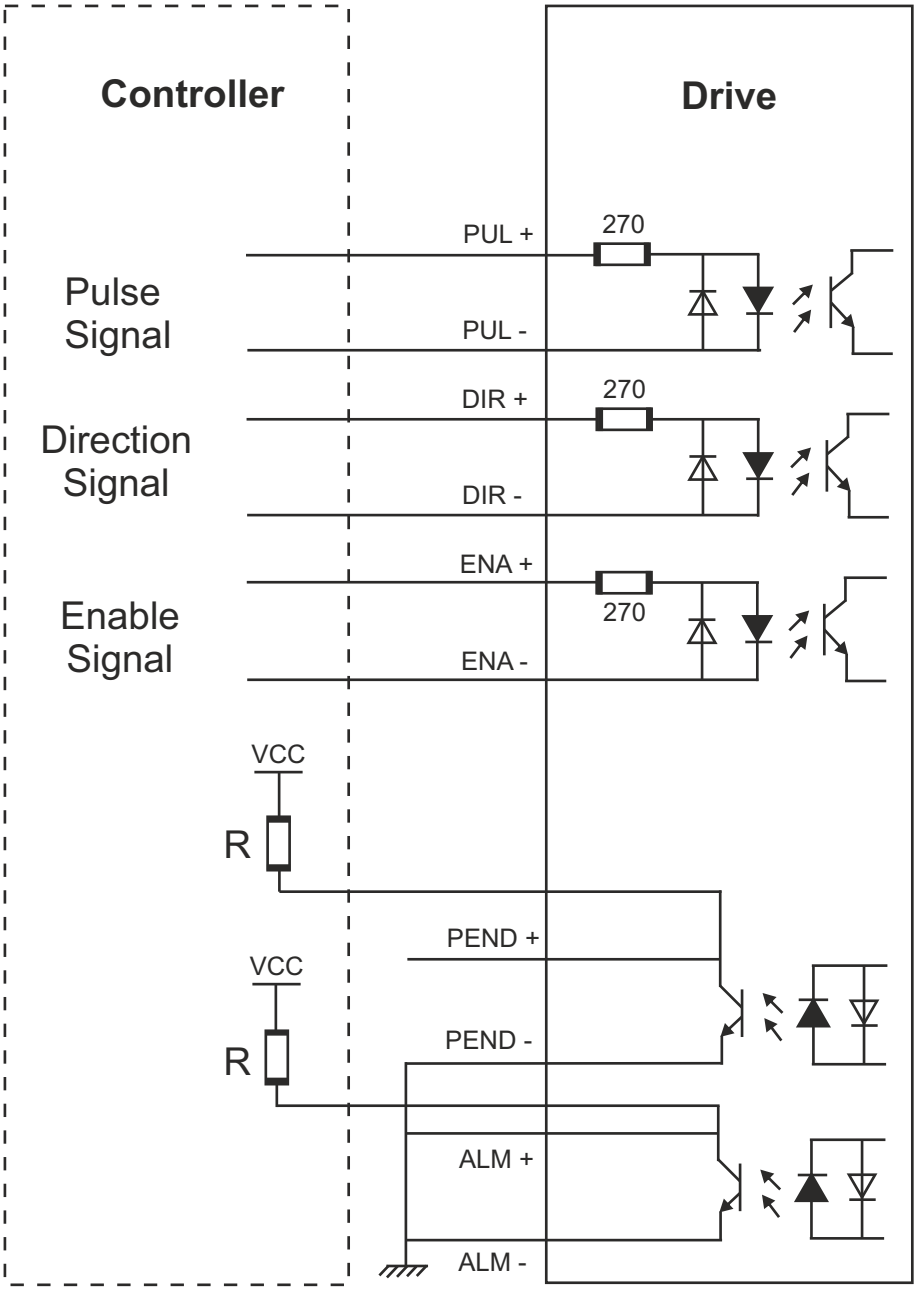

Remark :

VCC is compatible with 5 V or 24 V ;
R (3 ~ 5 K) must be connected to control signal terminal.

5.4 Sequence Chart of Control Signals

In order to avoid some fault operations and deviations, PUL, DIR and ENA should abide by some rules, shown as following diagram :

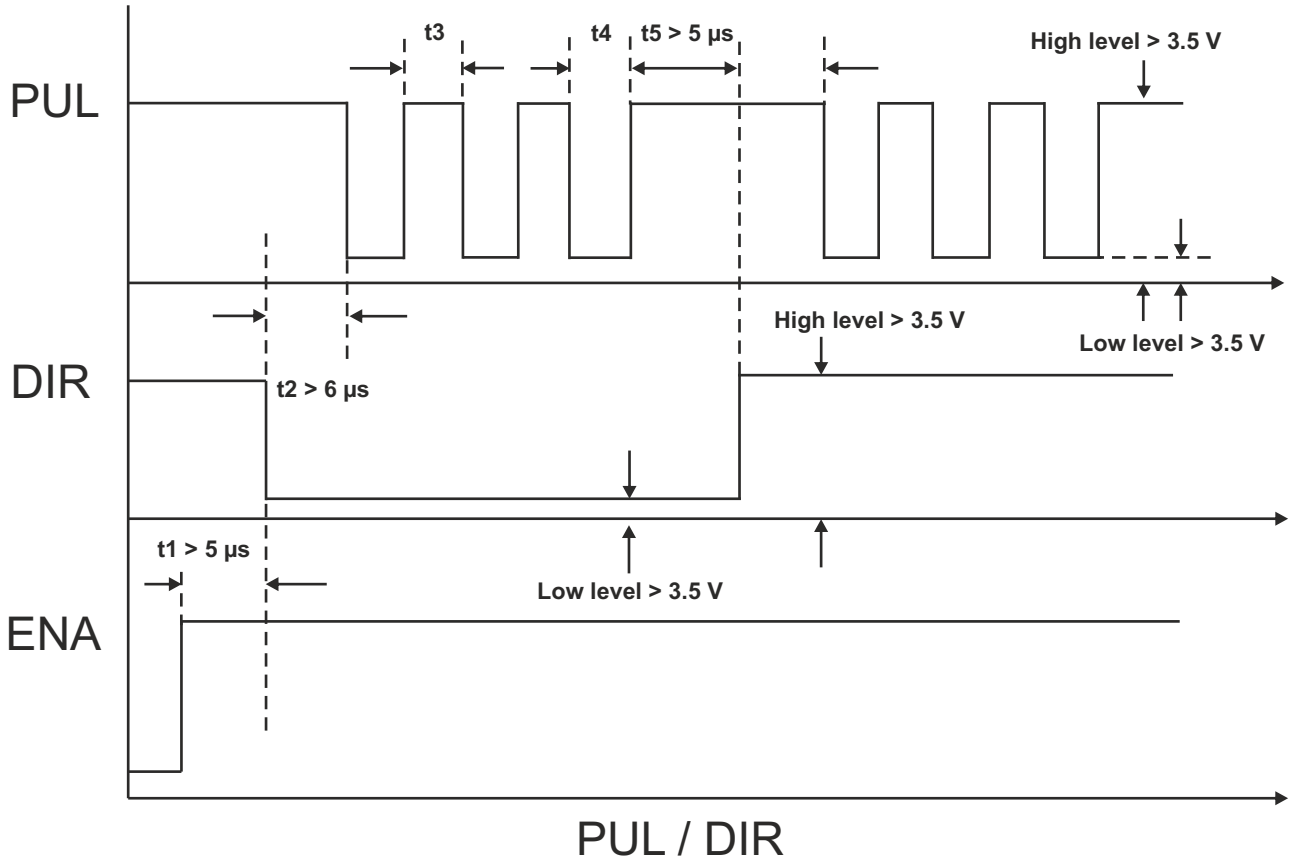

Remark :

a. t1 : ENA must be ahead of DIR by at least 5 μ s.Usually, ENA + and ENA - are NC (not connected).

b. t2 : DIR must be ahead of PUL active edge by 6 μ s to ensure correct direction.

c. t3 : Pulse width not less than 2.5 μ s.

d. t4 : Low level width not less than 2.5 μ s.

6. DIP Switch Setting

6.1 Activate Edge Setting

SW1 is used for setting the activate edge of the input signal, “ off ‘ means the activate edge is the rising edge, while “ on “ is the falling edge.

6.2 Running Direction Setting

SW 2 is used for setting the running direction, “ off “ means CCW, while, “on” means CW.

6.3 Micro Steps Setting

The micro steps setting is in the following table, while SW3, SW4, SW5, Sw6 are all on, the internal default micro steps inside is activate, this ratio can be setting through the HISU.

Dial switch / Micro Steps	SW3	SW4	SW5	SW6
Default	On	On	On	On
800	Off	On	On	On
1600	On	Off	On	On
3200	Off	Off	On	On
6400	On	On	Off	On
12800	Off	On	Off	On
25600	On	Off	Off	On
51200	Off	Off	Off	On
1000	On	On	On	Off
2000	Off	On	On	Off
4000	On	Off	On	Off
5000	Off	Off	On	Off
8000	On	On	Off	Off
10000	Off	On	Off	Off
20000	On	Off	Off	Off
40000	Off	Off	Off	Off

7. Faults alarm and LED flicker frequency

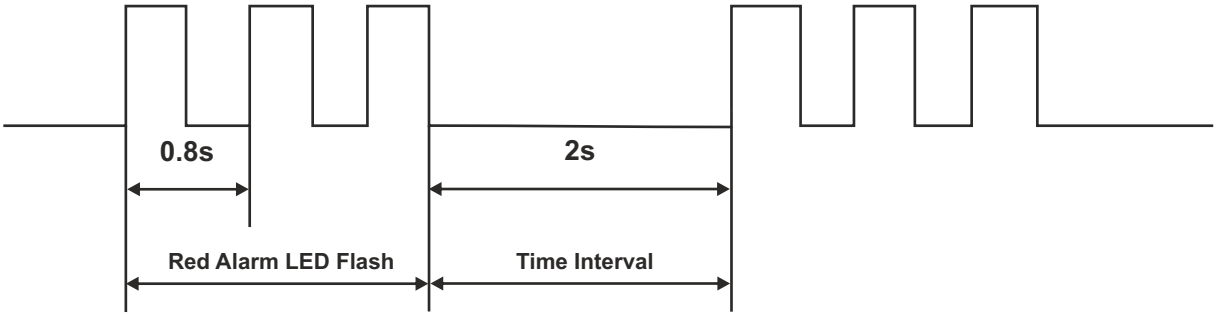

Flicker Frequency	Description to the Faults
1	Error occurs when the motor coil current exceeds the drive's current limit.
2	Voltage reference error in the drive.
3	Parameters upload error in the drive.
4	Error occurs when the input voltage exceeds the drive's voltage limit.
5	Error occurs when the actual position following error exceeds the limit which is set by the position error limit.

8. Appearance and Installation Dimensions

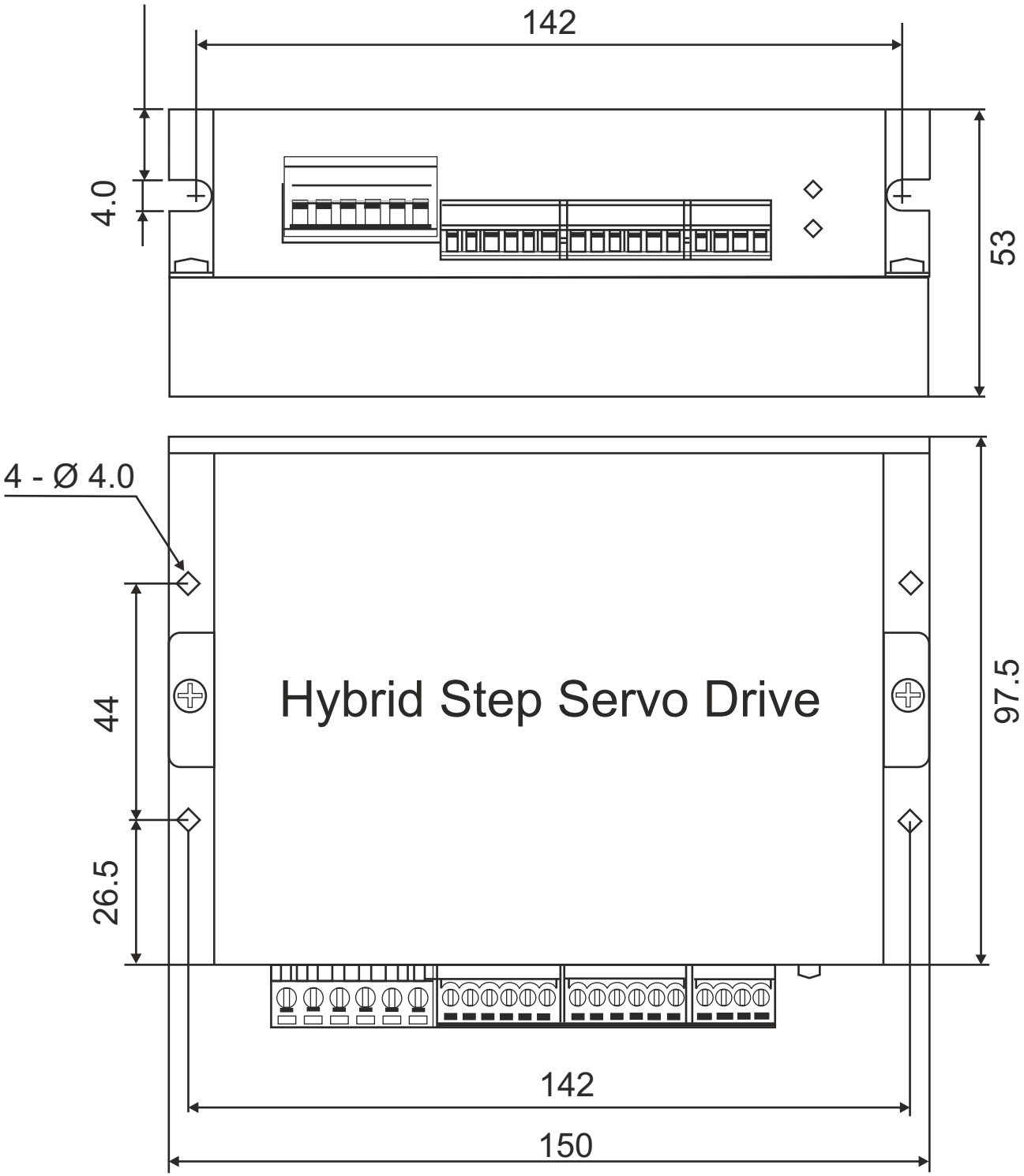

9. Typical Connection

This drive can provide the encoder with a power supply of +5V, maximum current 80 mA.It adopts a quadruplicated-frequency counting method, and the resoulation ratio of the encoder multiply 4 are the pulses per rotate of the servo motor.Here is the typical connection of BHSSD.

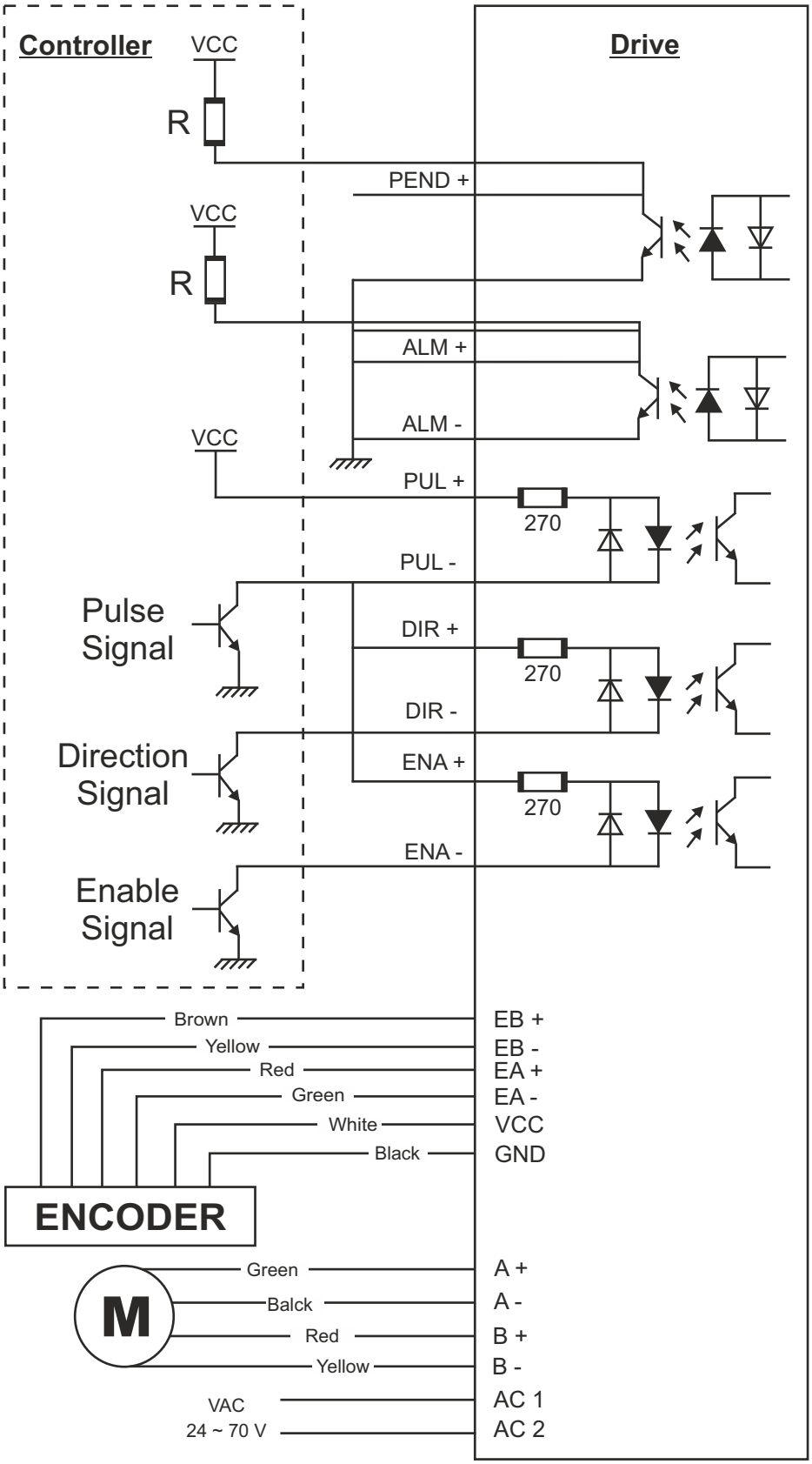

10. Processing Methods to Common Problems and Faults

10.1 Power on power Light off

No power input please check the power supply circuit.The voltage is too low.

10.2 Power on red alarm light on

Please check the motor feedback signal and if the motor is connected to the drive.

The stepper servo drive is over voltage or under voltage.Please lower or increase the input voltage.

10.3 Red alarm light on after the motor running a small angle

Please check the motor phase wires if they are connected correctly, if not, Please refer to the 3.4 Power Ports.

Please check the parameter in the drive if the poles of the motor and the encoder lines are corresponding with the real parameters, if not, set them correctly.

Please check if the frequency of the pulse signal is too fast, thus the motor may be out of the rated speed and lead to position error.

10.4 After input pulse signal but the motor not running

Please check the input pulse signal wires are connected in reliable way.

Please make sure the input pulse mode is corresponding with the real input mode.